1887112
O-Barcelona Counter Stool
Parts and Hardware List

A.	Front Left Leg	1 pc
B.	Front Right Leg	1 pc
C.	Back Assembly	1 pc
D.	Seat Frame	1 pc
E.	Stretcher	1 pc
F.	Seat Mat	1 pc
G.	Allen Head Bolts	12 pcs
H.	Phillips Head Screws	4 pcs
I.	Phillips Head Screwdriver	1 pc
J.	Allen Head Wrench	1 pc
K.	Optional Allen Head Screwdriver Bit	1 pc

* Please make sure that you have all the parts and hardware indicated above before you begin assembly of this item.
* This item should be assembled on a soft surface to prevent scratching the finish during assembly.
* This item may require periodic tightening.
* Take care not to overtighten bolts if using supplied Allen Head Screwdriver Bit.

Hardware Illustrations

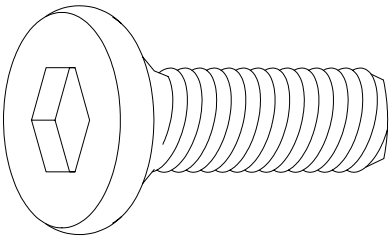

G. Allen Head Bolt

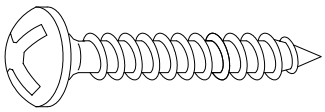

H. Phillips Head Screw

1887112
O-Barcelona Counter Stool

Attach Front Legs

Parts required

A.	Front Left Leg	1 pc	G.	Allen Head Bolts	4 pcs
B.	Front Right Leg	1 pc	J.	Allen Head Wrench	1 pc
D.	Seat Frame	1 pc	K.	Optional Allen Head Screwdriver Bit	1 pc

1. **Attach Front Left & Right Legs (A, B)** Put the Seat Frame (D) upside down on a soft surface. Align the pre-drilled holes in the top brackets of Front Left & Right Legs (A, B) with the pre-threaded holes in the front corner blocks of Seat Frame (D). Secure with Allen Head Bolts (G) using Allen Head Tool (J or K). See Illustration #1.

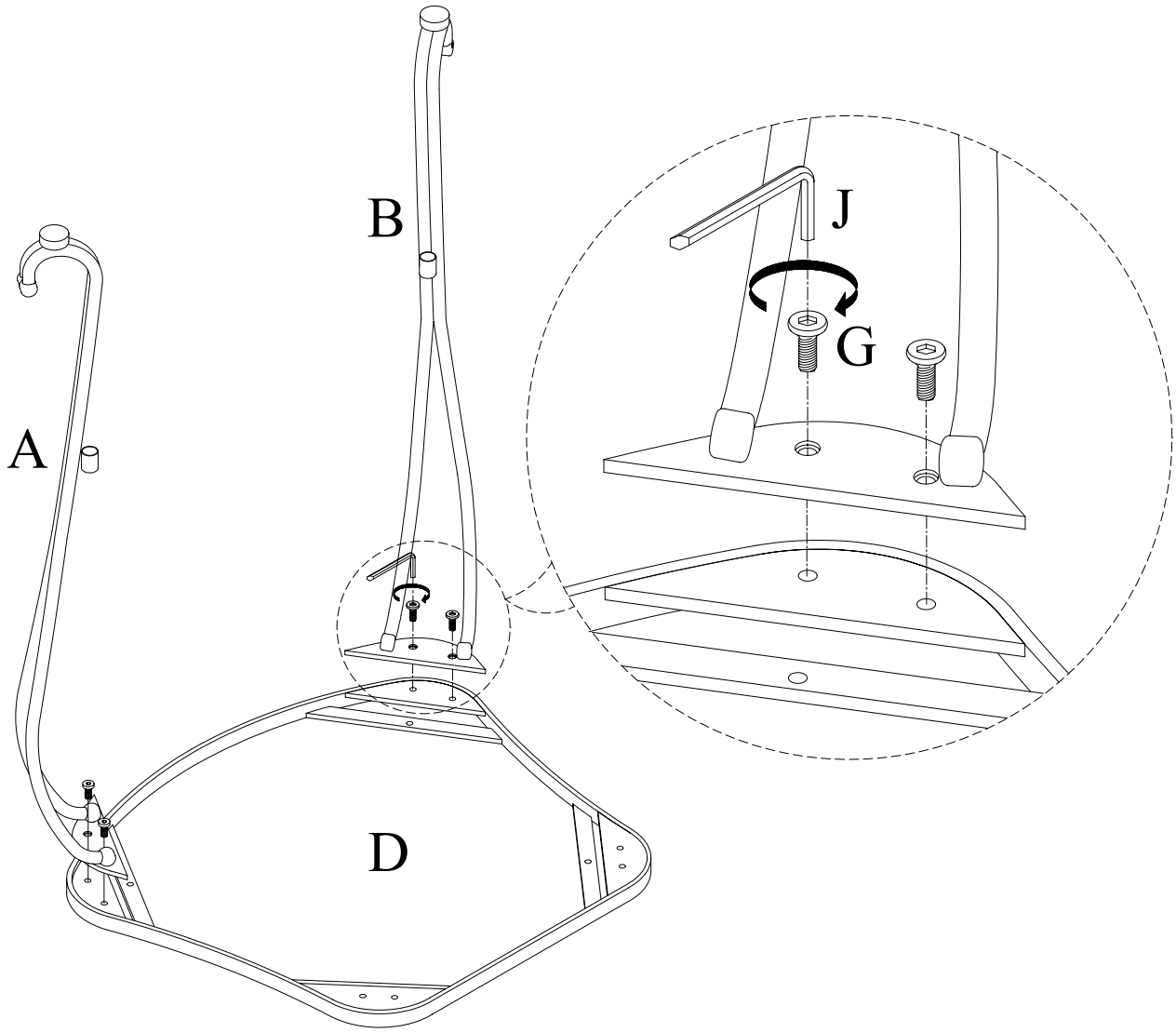

Illustration #1

1887112
O-Barcelona Counter Stool

Attach Back Assembly, Stretcher & Seat Mat

Parts required

A.	Front Left Leg	1 pc	G.	Allen Head Bolts	8 pcs
B.	Front Right Leg	1 pc	H.	Phillips Head Screws	4 pcs
C.	Back Assembly	1 pc	I.	Phillips Head Screwdriver	1 pc
D.	Seat Frame	1 pc	J.	Allen Head Wrench	1 pc
E.	Stretcher	1 pc	K.	Optional Allen Head Screwdriver Bit	1 pc
F.	Seat Mat	1 pc			

2. **Attach Back Assembly (C)** Align the pre-drilled holes in the brackets of Back Assembly (C) with the pre-threaded holes in the back corner blocks of Seat Frame (D). Secure with Allen Head Bolts (G) using Allen Head Tool (J or K). See Illustration #2.
3. **Attach Stretcher (E)** Insert the stocks of Stretcher (E) into the pre-attached tubes in the Front Left & Right Legs (A, B) & legs of Back Assembly (C). Make sure the scroll rail faces forward. Secure with Allen Head Bolts (G) using Allen Head Tool (J or K). See Illustration #2.
4. **Attach Seat Mat (F)** Put the Seat Mat (F) into the Seat Frame (D). Insert the Phillips Head Screws (I) through the pre-drilled holes in the cleat rails of Seat Frame (D) to the board under Seat Mat (F). Secure with Phillips Head Screws (H) using Phillips Head Screwdriver (I). See Illustration #2.

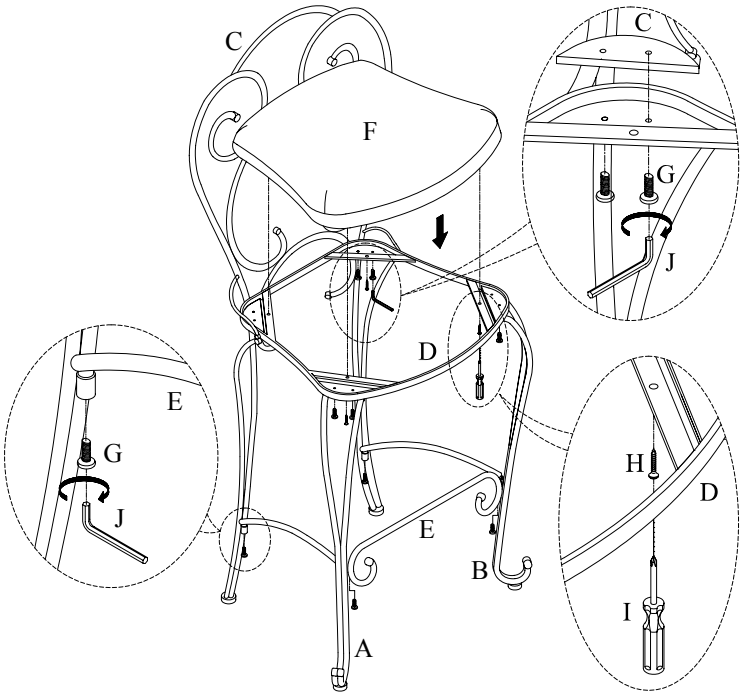

llustration #2